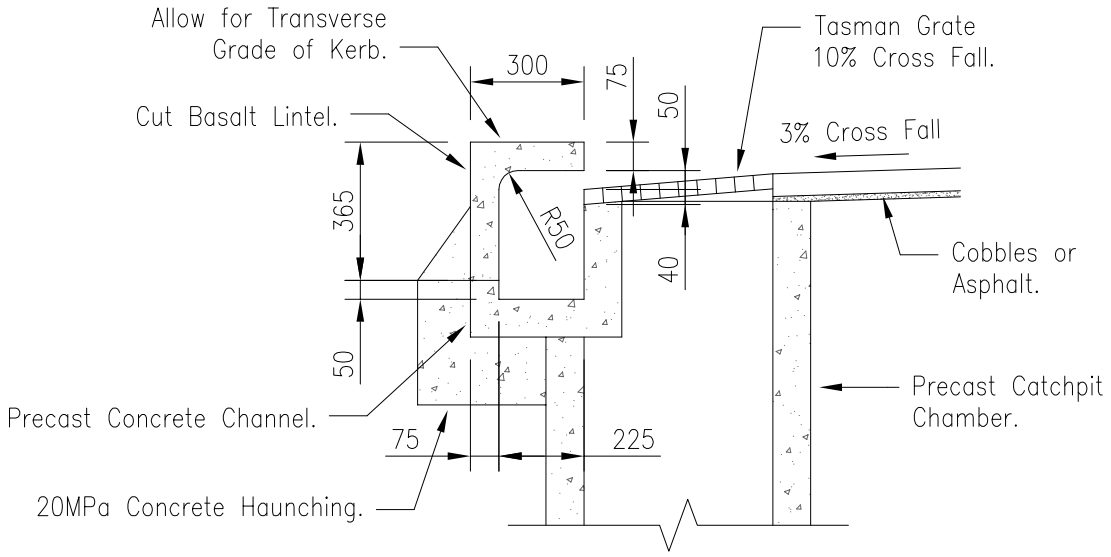

SECTION B – STONE LINTEL

SCALE 1:20

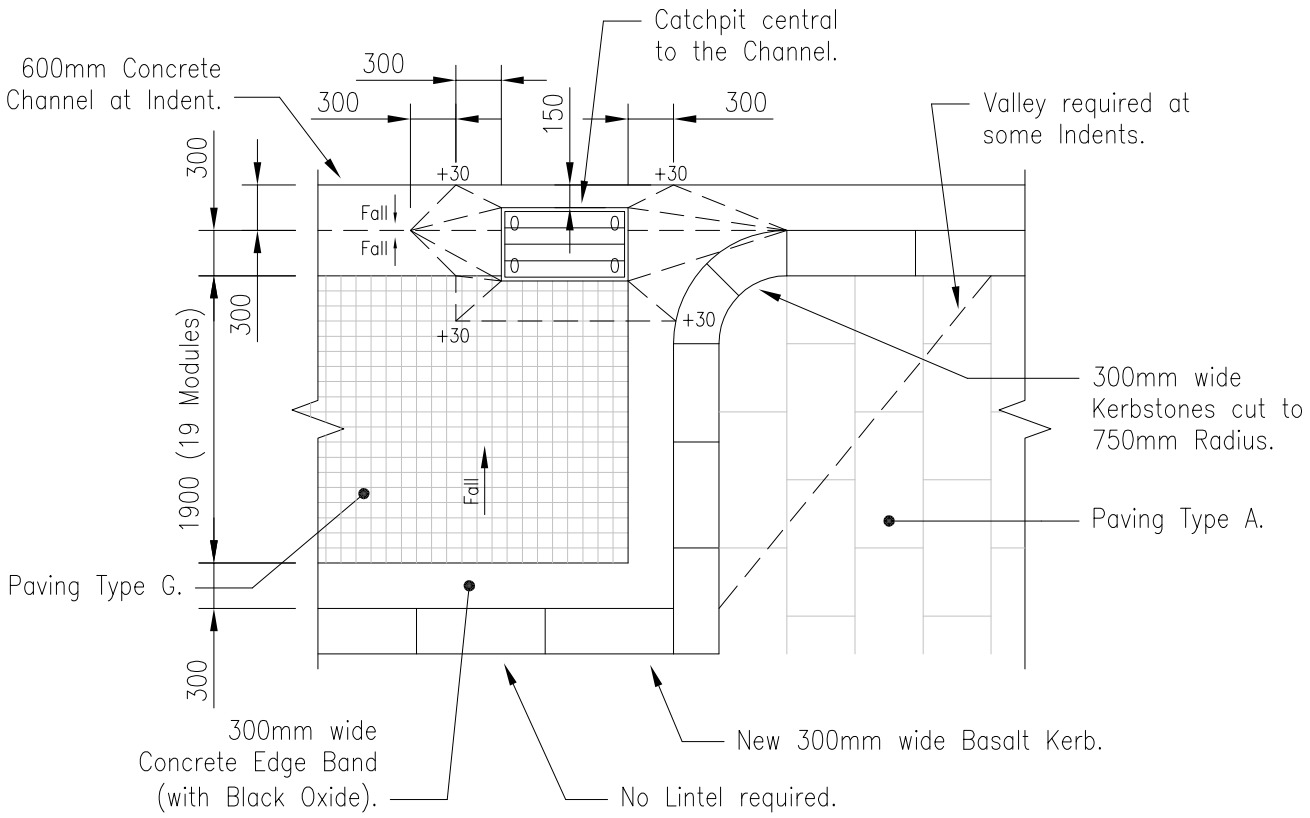

TYPICAL CHANNEL CATCHPIT PLAN

SCALE 1:50

PREPARED BY:

OPUS

AUCKLAND City Council

AUCKLAND *CITY*
Transport

QUEEN STREET CATCHPIT DETAILS SHEET TWO OF TWO

SCALE :	1:20 ; 1:50
DRAWN :	MKG
ISSUE DATE :	11/2008
APPROVED :	
PLAN No.	ISSUE A
2008/1107	